FMD02 series

High price performance ratio milling tool

Optimized acute angle position style, good self-locking capability and high positioning precision. Tools can provide enough resistance to make sure the stability during machining.

High strength screw locking

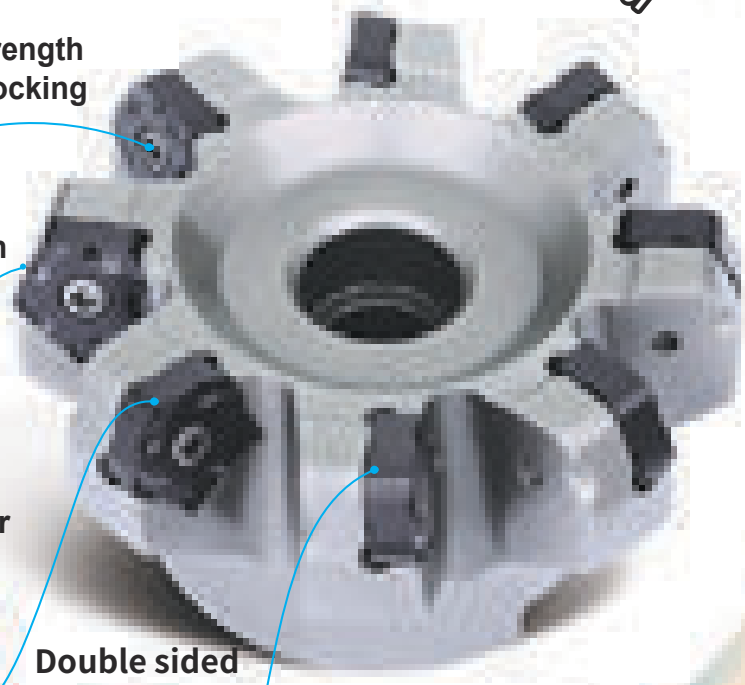

67° approach angle

Wide chip breaker and big rake angle design meets different machining needs under different machine power.

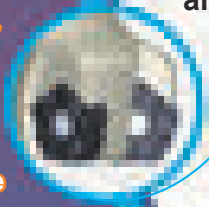

Wiper

Inserts are design with wiper on, which enabled fine surface quality under different feed rate.

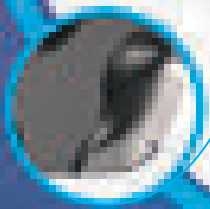

Double sided cutting edges

Great economy features and multi series of chip breakers for most kind of machining circumstances.

General face milling for steel and cast iron

-CF -CM -CR

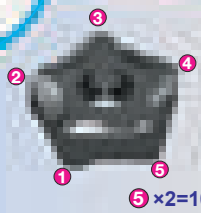

5 ×2=10 cutting edges

New

New chip breaker for machining in cast iron

-KH -KM -KL

General face milling for cast iron

-PF -PM -PR

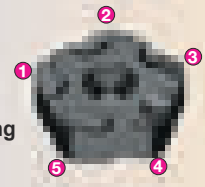

5 ×2=10 cutting edges

-KH

Nose strengthened type
Anti-breakage machining

-KM

General machining chip breaker
First choice for cast iron machining

-KL

Low-cutting-power machining
Preventing vibration inhibiting sentus
Guarantee the surface quality

Spiral cutting-edge structure, double rake angle and variable beveling design make the inserts meet the need of different cutting depth machining perfectly.

10 cutting edges design improves the price performance ratio.

Strengthened nose design, cutting edges' toughness is improved, great wear resistance and long cutting life.

Low cutting resistance design inhibits vibration perfectly. Pair with FMD02 to realize high efficient machining of cast iron.

Face milling tools

Kr:67°

FMD02

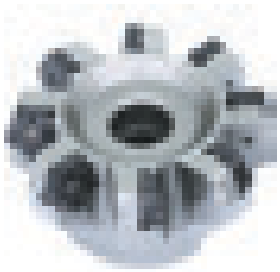

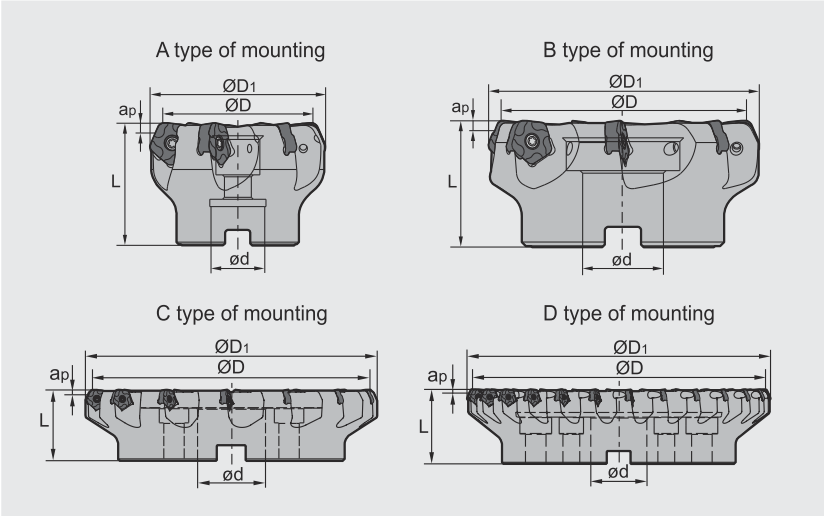

Specification of tools

Type		Dimensions(inch)						
		ØD	ØD1	ød	L	apmax	Z (Number of teeth)	Mounting type
FMD02 Coarse pitch (unequal pitch)	**-2.00"-A0.75"-PN11-04**	2.000	2.398	0.750	1.750	0.197/0.256/0.276	4	A
	-2.50"-A0.75"-PN11-05	2.500	2.898	0.750	1.750	0.197/0.256/0.276	5	A
	-3.00"-A1.00"-PN11-06	3.000	3.398	1.000	2.000	0.197/0.256/0.276	6	A
	-4.00"-B1.25"-PN11-07	4.000	4.398	1.250	2.000	0.197/0.256/0.276	7	B
	-5.00"-B1.50"-PN11-08	5.000	5.398	1.500	2.500	0.197/0.256/0.276	8	B
	-6.00"-B1.50"-PN11-10	6.000	6.398	1.500	2.500	0.197/0.256/0.276	10	B
	-8.00"-C2.50"-PN11-12	8.000	8.398	2.500	2.500	0.197/0.256/0.276	12	C
	-10.00"-C2.50"-PN11-14	10.000	10.398	2.500	2.500	0.197/0.256/0.276	14	C
Close pitch	**-2.00"-A0.75"-PN11-05**	2.000	2.398	0.750	1.750	0.197/0.256/0.276	5	A
	-2.50"-A0.75"-PN11-06	2.500	2.898	0.750	1.750	0.197/0.256/0.276	6	A
	-3.00"-A1.00"-PN11-08	3.000	3.398	1.000	2.000	0.197/0.256/0.276	8	A
	-4.00"-B1.25"-PN11-10	4.000	4.398	1.250	2.000	0.197/0.256/0.276	10	B
	-5.00"-B1.50"-PN11-12	5.000	5.398	1.500	2.500	0.197/0.256/0.276	12	B
	-6.00"-B1.50"-PN11-14	6.000	6.398	1.500	2.500	0.197/0.256/0.276	14	B
	-8.00"-C2.50"-PN11-16	8.000	8.398	2.500	2.500	0.197/0.256/0.276	16	C
	-10.00"-C2.50"-PN11-18	10.000	10.398	2.500	2.500	0.197/0.256/0.276	18	C
	-12.00"-D2.50"-PN11-26	12.000	12.398	2.500	2.500	0.197/0.256/0.276	26	D

Spare parts

Diameter ØD	Insert screw	Wrench	Sketch of installation
Ø2.00"~Ø12.00"	I60M4×10	WT15IS	

Face milling tools

Kr:67°

FMD02

P K

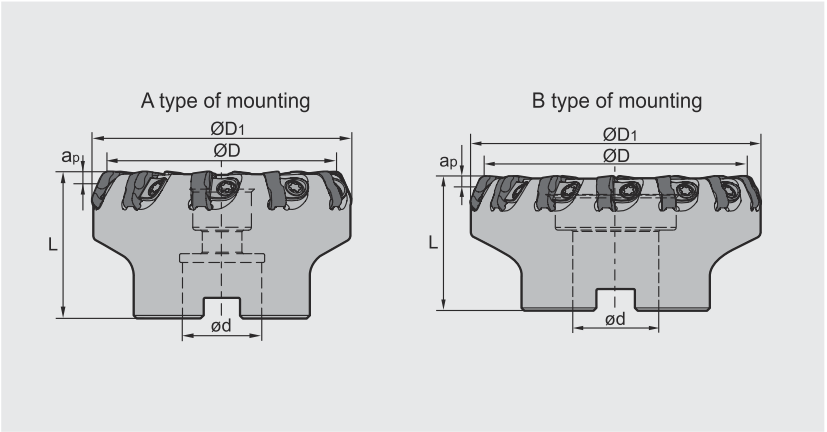

Specification of tools

Type		Dimensions(inch)						
		ØD	ØD1	ød	L	apmax	Z (Number of teeth)	Mounting type
FMD02 Extra close pitch	**-3.00"-A1.00"-PN11-10**	3.000	3.398	1.000	1.750	0.197/0.256/0.276	10	A
	-4.00"-B1.25"-PN11-14	4.000	4.398	1.250	2.000	0.197/0.256/0.276	14	B
	-5.00"-B1.50"-PN11-18	5.000	5.398	1.500	2.500	0.197/0.256/0.276	18	B
	-6.00"-B1.50"-PN11-22	6.000	6.398	1.500	2.500	0.197/0.256/0.276	22	B

D

Spare parts

Diameter ØD	Wedge	Insert screw	Wrench	Sketch of installation
				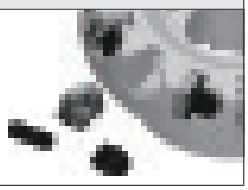
Ø3.00"~Ø6.00"	W18N	DM6×20A	WT15IT	

Selection of inserts

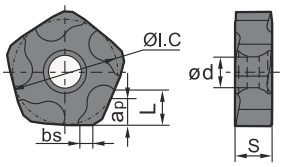

Workpiece material	Good working conditions	General working conditions	Adverse working conditions
P Steel	YBD152, YBD203, YBG202, YBG205, YBG205H, YB9320, YNG151, YNG151C	YBM253, YBG105, YBG302, YBS203, YD101, YD201	YBS303
M Stainless steel	YBD152, YBD203, YBG202, YBG205, YBG205H, YB9320, YBS303, YNG151, YNG151C	YBM253, YBG302, YBS203, YD101, YD201	
K Cast iron	YBG105	YBD152, YBD203, YBD252	YD201
N Ferrite materials			YD101, YD201
S Heat-resistant steel	YBG105	YBD152, YBD203, YBD252, YBG202, YBG205, YBG205H, YB9320	YBS203, YBS303

Insert shape	Type	Dimensions(inch)						Coated grade													Cermet		Cemented carbide	
		L	ØI.C	S	ød	bs	apmax	YBC302	YBM253	YBD152	YBD203	YBD252	YBG105	YBG202	YBG205	YBG205H	YB9320	YBG302	YBS203	YBS303	YNG151	YNG151C	YD101	YD201
	PNEG110512R-CF	0.213	0.625	0.219	0.183	0.063	0.197			●														
	PNEG110512L-CF	0.213	0.625	0.219	0.183	0.063	0.197			●														
	PNEG110512R-CM	0.213	0.625	0.219	0.183	0.063	0.197			●	○													
	PNEG110512L-CM	0.213	0.625	0.219	0.183	0.063	0.197			●	○													
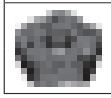	PNEG110512R-CR	0.213	0.625	0.219	0.183	0.063	0.197			●	○													
	PNEG110512L-CR	0.213	0.625	0.219	0.183	0.063	0.197			●														

● Recommended grade ○ Produce according to order

D

Selection of inserts

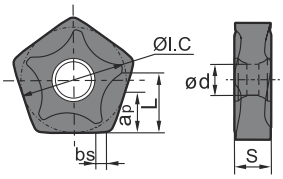

Workpiece material	Good working conditions	General working conditions	Adverse working conditions
P Steel	YBD152, YBD203, YBG202, YBG205, YBG205H, YB9320, YNG151, YNG151C	YBM253, YBG105, YBG302, YBS203, YD101, YD201	YBS303
M Stainless steel	YBD152, YBD203, YBG202, YBG205, YBG205H, YB9320, YBS303, YNG151, YNG151C	YBM253, YBG302, YBS203, YD101, YD201	
K Cast iron	YBG105	YBD152, YBD203, YBD252	YD201
N Ferrite materials			YD101, YD201
S Heat-resistant steel	YBG105	YBD152, YBD203, YBD252, YBG202, YBG205, YBG205H, YB9320	YBS203, YBS303

Insert shape	Type	Dimensions(inch)						Coated grade													Cermet		Cemented carbide	
		L	ØI.C	S	ød	bs	apmax	YBC302	YBM253	YBD152	YBD203	YBD252	YBG105	YBG202	YBG205	YBG205H	YB9320	YBG302	YBS203	YBS303	YNG151	YNG151C	YD101	YD201
	PNEG110512R-PF	0.296	0.625	0.219	0.183	0.056	0.276	●	●															
	PNEG110512L-PF	0.296	0.625	0.219	0.183	0.056	0.276	●	●															
	PNEG110512R-PM	0.296	0.625	0.219	0.183	0.056	0.276	●	●															
	PNEG110512L-PM	0.296	0.625	0.219	0.183	0.056	0.276	●	●															
	PNEG110512R-PR	0.296	0.625	0.219	0.183	0.056	0.276	●	●															
	PNEG110512L-PR	0.296	0.625	0.219	0.183	0.056	0.276	●	●															

● Recommended grade ○ Produce according to order

Selection of inserts

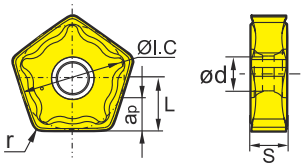

Workpiece material		YBC302	YBM253	YBD152	YBD203	YBD252	YBG105	YBG202	YBG205	YBG205H	YB9320	YBG302	YBS203	YBS303	YNG151	YNG151C	YD101	YD201
P	Steel	😐	😐					😐	😐	😐	😊	☹			😊	😊		
M	Stainless steel	😐	😐					😐	😐	😐	😐	☹		☹	😊	😊		
K	Cast iron			😐	😐	☹	😊											☹
N	Ferrite materials																😐	☹
S	Heat-resistant steel						😊	😐	😐	😐	😐		😐	☹				

😊 Good working conditions 😐 General working conditions ☹ Adverse working conditions

Insert shape	Type	Dimensions(inch)						Coated grade												Cermet		Cemented carbide	
		L	ØI.C	S	ød	r	$a_p$max	YBC302	YBM253	YBD152	YBD203	YBD252	YBG105	YBG202	YBG205	YBG205H	YB9320	YBG302	YBS203	YBS303	YNG151	YNG151C	YD101	YD201
	PNEG110512-KL	0.256	0.625	0.219	0.183	0.047	0.256			●		●												
	PNEG110512-KM	0.256	0.625	0.219	0.183	0.047	0.256			●	○	●												
	PNEG110512-KH	0.256	0.625	0.219	0.183	0.047	0.256			●		●												

• Inserts can be assembled in both left and right side.

● Recommended grade ○ Produce according to order

D

Recommended cutting parameters

Workpiece material		Hardness HB	Insert grade	Cutting parameters				
				V(SFPM)	f(IPT)			$a_p$max(in)
					PF	PM	PR	
P	Low carbon steel, Soft steel	⩽180	YBC302 YBM253	900(700-1100)	0.006(0.004-0.008)	0.008(0.004-0.012)	0.012(0.008-0.016)	0.295
P	High-carbon steel, Alloy steel	180-280	YBC302 YBM253	850(650-1000)	0.006(0.004-0.008)	0.008(0.004-0.012)	0.012(0.008-0.016)	0.295
P	Alloy tool steel	280-350	YBC302 YBM253	800(600-950)	0.006(0.004-0.008)	0.008(0.004-0.012)	0.012(0.008-0.016)	0.295
K	Cast iron	180-250	YBD152	900(500-1000)	CF	CM	CR	0.197
					0.006(0.004-0.008)	0.008(0.004-0.012)	0.012(0.008-0.016)	
K	Gray cast iron	180-250			KL	KM	KH	0.256
			YBD152	900(500-1000)	0.01(0.004-0.016)	0.012(0.008-0.02)	0.016(0.008-0.024)	
			YBD252	800(500-900)	0.01(0.008-0.016)	0.012(0.008-0.02)	0.016(0.008-0.024)	

Face milling tools

Kr:60°

FMD03

P M K

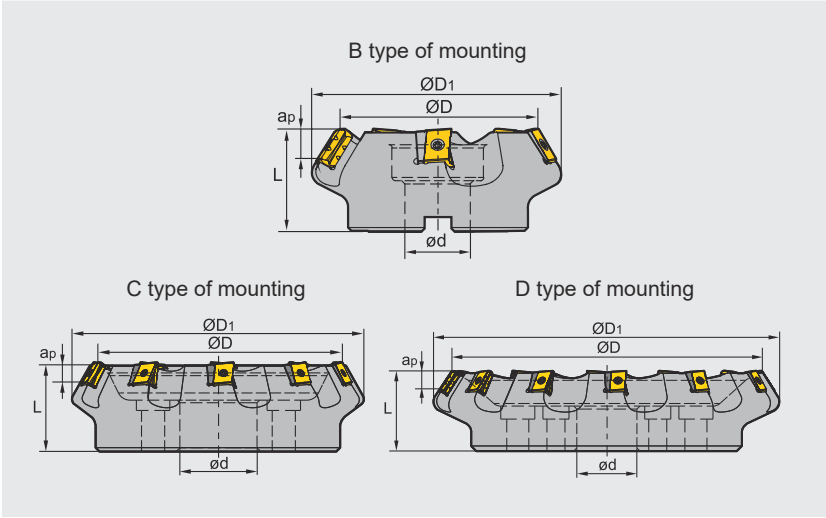

Specification of tools

Type		Dimensions(inch)						
		ØD	ØD1	ød	L	apmax	Z (Number of teeth)	Mounting type
FMD03	**-5.00"-B1.5"-LN20-06**	5.000	6.053	1.500	2.500	0.472	6	B
	-6.00"-C1.5"-LN20-08	6.000	7.053	1.500	2.500	0.472	8	C
	-8.00"-C2.5"-LN20-10	8.000	9.053	2.500	2.500	0.472	10	C
	-10.00"-C2.5"-LN20-12	10.000	11.053	2.500	2.500	0.472	12	C
	-12.00"-D2.5"-LN20-15	12.000	13.053	2.500	2.500	0.472	15	D
	-5.00"-B1.5"-LN25-05	5.000	6.172	1.500	2.500	0.669	5	B
	-6.00"-C1.5"-LN25-06	6.000	7.172	1.500	2.500	0.669	6	C
	-8.00"-C2.5"-LN25-08	8.000	9.172	2.500	2.500	0.669	8	C
	-10.00"-C2.5"-LN25-10	10.000	11.172	2.500	2.500	0.669	10	C
	-12.00"-D2.5"-LN25-12	12.000	13.172	2.500	2.500	0.669	12	D

Spare parts

Insert specifrication	Shim	Shim screw	Insert screw	Wrench		Sketch of installation
LNKT2007DN-ZR	LLN20R-ZR	I60M3×7	I60M4×15	WT15IS	WT09IS	
LNKT2510-ZR	LLN25R-ZR	I60M3.5×10.4	I60M5×17	WT20IT	WT15IS	

D

Selection of inserts

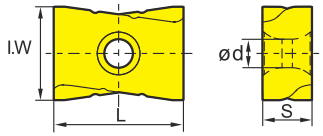

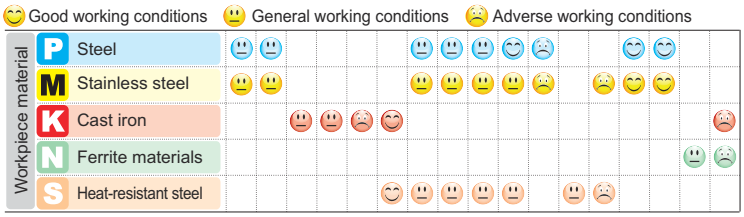

Insert shape	Type	Dimensions(inch)				Coated grade													Cermet		Cemented carbide	
		L	I.W	S	ød	YBC302	YBM253	YBD152	YBD203	YBD252	YBG105	YBG202	YBG205	YBG205H	YB9320	YBG302	YBS203	YBS303	YNG151	YNG151C	YD101	YD201
	LNKT2007DN-ZR	0.787	0.669	0.313	0.181			○								●						
	LNKT2510-ZR	0.984	0.709	0.375	0.217					○						●						

● Recommended grade ○ Produce according to order

Recommended cutting parameters

Workpiece material		Hardness HB	Insert grade	Cutting parameters	
				V(SFPM)	f(IPT)
P	Low carbon steel, Soft steel	≤180	YBG302	600 (500-1000)	0.02 (0.008-0.031)
			YBM351	600 (500-1000)	0.02 (0.008-0.031)
	High-carbon steel, Alloy steel	180-280	YBG302	500 (400-900)	0.02 (0.008-0.031)
			YBM351	450 (400-900)	0.02 (0.008-0.031)
	Alloy tool steel	280-350	YBG302	400 (250-800)	0.018 (0.008-0.024)
			YBM351	300 (250-800)	0.018 (0.008-0.024)
M	Stainless steel	≤270	YBG302	400 (250-650)	0.018 (0.008-0.024)
			YBM351	300 (250-650)	0.018 (0.008-0.024)
K	Cast iron	180-250	YBD152	700 (500-1000)	0.02 (0.008-0.031)
			YBD252	680 (500-1000)	0.02 (0.008-0.031)
			YBG302	650 (500-1000)	0.02 (0.008-0.031)

Note: Cutting parameters can be adjusted according to the Max. power of machine.

Case for FMD03

(Comparison of machining time)

Workpiece material: ASTM A743
CA-6NM(HB200)
Tool type: FMD03-12.00"-D2.5"-LN25-12
Insert type/grade: LNKT2510-ZR/YBG302
Cooling system: dry cutting
Machine: NC floor type boring and milling machine,
spindle power≥30KW
Cutting parameters: V_c=400 SFPM, a_p=0.472in
f_z=0.022IPT, a_e=9in

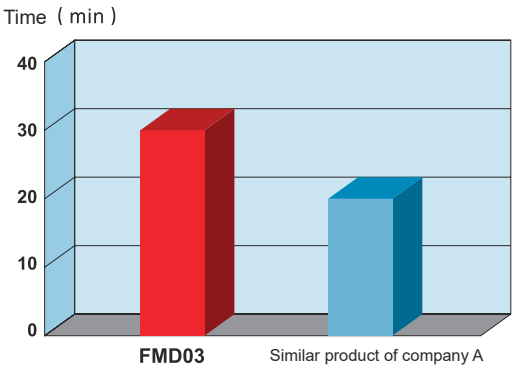

Face milling tools

Kr:67°

FMD04

P K

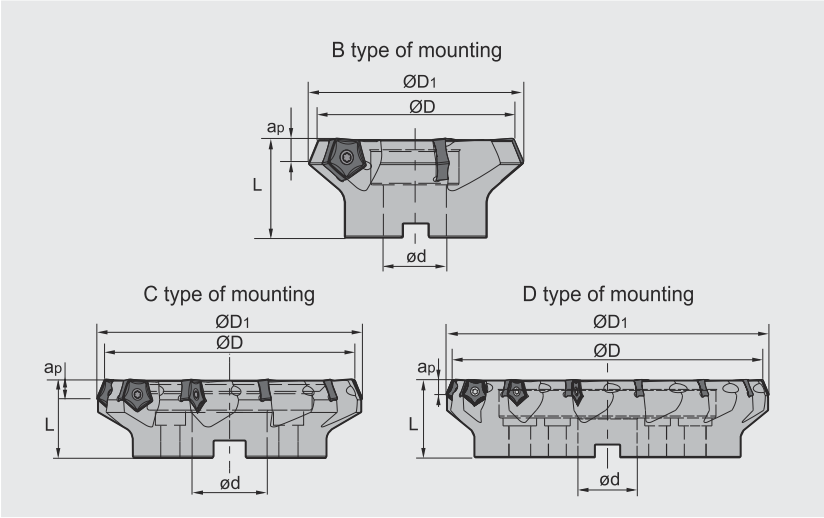

Specification of tools

Type		Dimensions(inch)						
		ØD	ØD1	ød	L	apmax	Z (Number of teeth)	Mounting type
FMD04	**-5.00"-B1.50"-PN17-06**	5.000	5.496	1.500	2.500	0.472	6	B
	-6.00"-B2.00"-PN17-08	6.000	6.496	2.000	2.500	0.472	8	B
	-8.00"-C2.50"-PN17-10	8.000	8.496	2.500	2.500	0.472	10	C
	-10.00"-C2.50"-PN17-12	10.000	10.496	2.500	2.500	0.472	12	C
	-12.00"-D2.50"-PN17-14	12.000	12.496	2.500	2.500	0.472	14	D

D

Spare parts

Diameter ØD	Insert specifrication	Insert screw	Wrench	Sketch of installation
				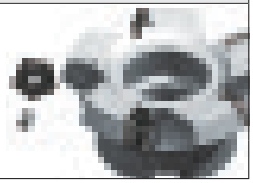
Ø5.00"~Ø12.00"	PNGU170712R-GR/HDR	I43M6×16	WT25IT	

Selection of inserts

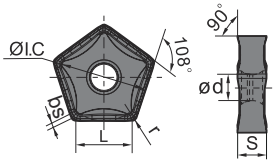

Good working conditions General working conditions Adverse working conditions

Workpiece material		YBC302	YBM253	YBD152	YBD203	YBD252	YBG105	YBG202	YBG205	YBG205H	YB9320	YBG302	YBS203	YBS303	YNG151	YNG151C	YD101	YD201
P	Steel	General	General					General	General	General	Good	Adverse			Good	Good		
M	Stainless steel	General	General					General	General	General	General	Adverse		Adverse	Good	Good		
K	Cast iron			General	General	Adverse	Good											Adverse
N	Ferrite materials																General	Adverse
S	Heat-resistant steel						Good	General	General	General	General		General	Adverse				

Insert shape	Type	Dimensions(inch)						Coated grade													Cermet		Cemented carbide	
		L	ØI.C	S	ød	bs	r	YBC302	YBM253	YBD152	YBD203	YBD252	YBG105	YBG202	YBG205	YBG205H	YB9320	YBG302	YBS203	YBS303	YNG151	YNG151C	YD101	YD201
	PNGU170712R-GR	0.554	0.925	0.312	0.283	0.049	0.047	●	●	●														
	PNGU170712-HDR	0.554	0.925	0.312	0.283	0.049	0.047											●						

● Recommended grade ○ Produce according to order

D

Recommended cutting parameters

Workpiece material		Hardness HB	Insert grade	Cutting parameters	
				V(SFPM)	f(IPT)
P	Low carbon steel, Soft steel	≤180	YBC302 YBM253 YBG302	400(300-450)	0.012(0.008-0.016)
P	High-carbon steel, Alloy steel	180-280	YBC302 YBM253 YBG302	350(300-400)	0.008(0.004-0.012)
P	Alloy tool steel	280-350	YBC302 YBM253 YBG302	300(200-400)	0.008(0.004-0.012)
K	Cast iron	180-250	YBD152	500(300-600)	0.012(0.008-0.016)

Face milling tools

Kr:75°

FME04

P M K

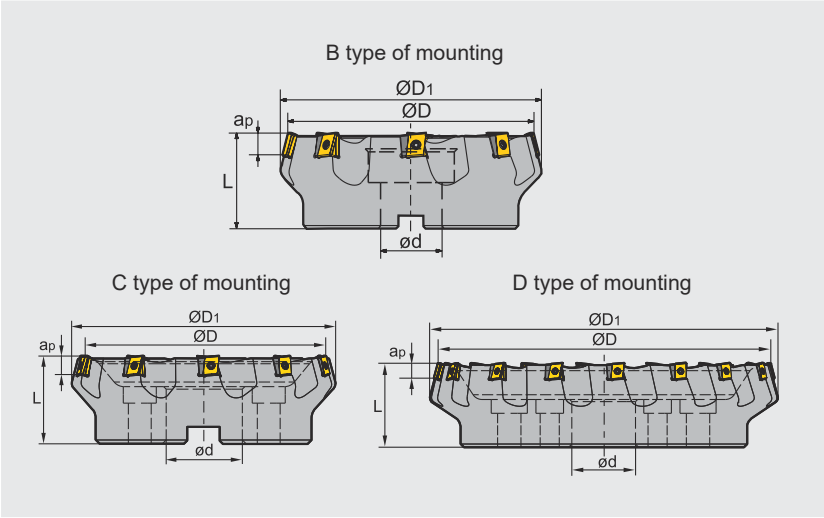

Specification of tools

Type		Dimensions(inch)						
		ØD	ØD1	ød	L	apmax	Z (Number of teeth)	Mounting type
FME04	**-5.00"-B1.5"-LN15-06**	5.000	5.388	1.500	2.500	0.472	6	B
	-6.00"-B1.5"-LN15-08	6.000	6.388	1.500	2.500	0.472	8	B
	-8.00"-C2.5"-LN15-10	8.000	8.388	2.500	2.750	0.472	10	C
	-10.00"-C2.5"-LN15-12	10.000	10.388	2.500	2.750	0.472	12	C
	-12.00"-D2.5"-LN15-16	12.000	12.388	2.500	3.150	0.472	16	D

D

Spare parts

Diameter ØD	Insert specifrication	Shim	Shim screw	Insert screw	Wrench	Sketch of installation
Ø5.00"~Ø12.00"	LNKT1506EN-ZR	LLN15-ZR	I60M3×7	I60M4×12	WT15IS, WT09IS	

Selection of inserts

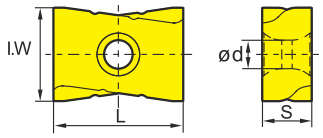

😊 Good working conditions 😐 General working conditions ☹️ Adverse working conditions

Workpiece material	YBC302	YBM253	YBD152	YBD203	YBD252	YBG105	YBG202	YBG205	YBG205H	YB9320	YBG302	YBS203	YBS303	YNG151	YNG151C	YD101	YD201
P Steel	😐	😐					😐	😐	😐	😊	☹️			😊	😊		
M Stainless steel	😐	😐					😐	😐	😐	😐	☹️		☹️	😊	😊		
K Cast iron			😐	😐	☹️	😊											☹️
N Ferrite materials																😐	☹️
S Heat-resistant steel						😊	😐	😐	😐	😐		😐	☹️				

Insert shape	Type	Dimensions(inch)				Coated grade													Cermet		Cemented carbide	
		L	I.W	S	ød	YBC302	YBM253	YBD152	YBD203	YBD252	YBG105	YBG202	YBG205	YBG205H	YB9320	YBG302	YBS203	YBS303	YNG151	YNG151C	YD101	YD201
	LNKT1506EN-ZR	0.625	0.551	0.25	0.181			○								●						

● Recommended grade ○ Produce according to order

Recommended cutting parameters

Workpiece material		Hardness HB	Insert grade	Cutting parameters	
				V(SFPM)	f(IPT)
P	Low-carbon steel, Soft steel	≤180	YBG302	600 (500-1000)	0.02 (0.008-0.031)
			YBM351	600 (500-1000)	0.02 (0.008-0.031)
	High-carbon steel, Alloy steel	180-280	YBG302	500 (400-900)	0.02 (0.008-0.031)
			YBM351	450 (400-900)	0.02 (0.008-0.031)
	Alloy tool steel	280-350	YBG302	400 (250-800)	0.018 (0.008-0.024)
			YBM351	300 (250-800)	0.018 (0.008-0.024)
M	Stainless steel	≤270	YBG302	400 (250-650)	0.018 (0.008-0.024)
			YBM351	300 (250-650)	0.018 (0.008-0.024)
K	Cast iron	180-250	YBD152	700 (500-1000)	0.02 (0.008-0.031)
			YBG302	650 (500-1000)	0.02 (0.008-0.031)

Note: Cutting parameters can be adjusted according to the Max. power of machine.

Face milling tools

Kr:75°

FME17 P M K S

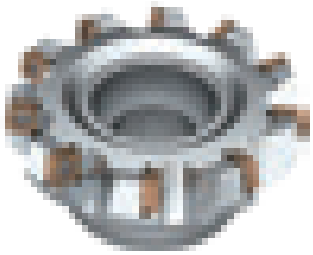

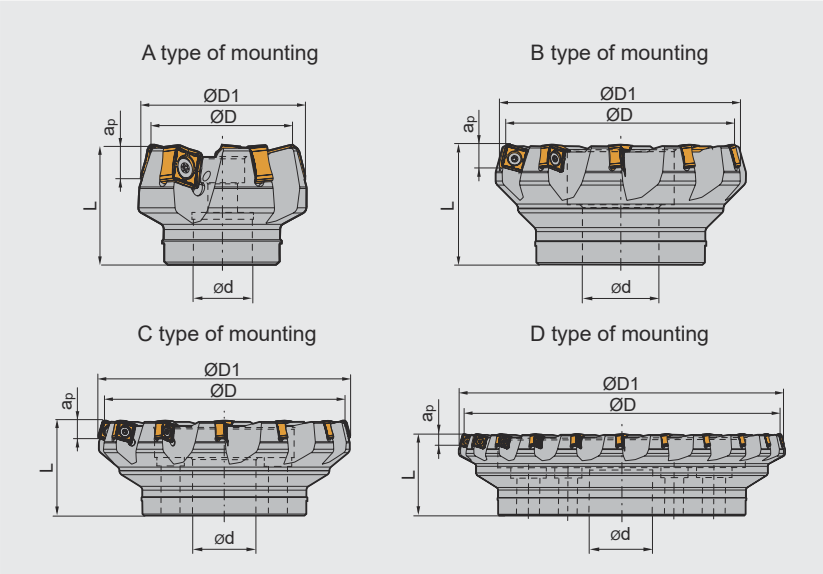

Specification of tools

Type		Dimensions(inch)						
		ØD	ØD1	ød	L	apmax	Z (Number of teeth)	Mounting type
FME17 Coarse pitch	**-2.00"-A0.75"-SN12-04C**	2.000	2.394	0.750	1.750	0.315	4	A
	-2.50"-A0.75"-SN12-05C	2.500	2.894	0.750	1.750	0.315	5	A
	-3.00"-A1.00"-SN12-07C	3.000	3.394	1.000	2.000	0.315	7	A
	-4.00"-A1.25"-SN12-08C	4.000	4.394	1.250	2.000	0.315	8	A
	-5.00"-B1.50"-SN12-10	5.000	5.394	1.500	2.500	0.315	10	B
	-6.00"-B2.00"-SN12-12	6.000	6.394	2.000	2.500	0.315	12	B
	-8.00"-C2.50"-SN12-14	8.000	8.394	2.500	2.500	0.315	14	C
	-10.00"-C2.50"-SN12-20	10.000	10.394	2.500	2.500	0.315	20	C
	-12.00"-D2.50"-SN12-22	12.000	12.394	2.500	2.500	0.315	22	D
Close pitch	**-2.00"-A0.75"-SN12-05C**	2.000	2.394	0.750	1.750	0.315	5	A
	-2.50"-A0.75"-SN12-07C	2.500	2.894	0.750	1.750	0.315	7	A
	-3.00"-A1.00"-SN12-09C	3.000	3.394	1.000	2.000	0.315	9	A
	-4.00"-A1.25"-SN12-11C	4.000	4.394	1.250	2.000	0.315	11	A
	-5.00"-B1.50"-SN12-14	5.000	5.394	1.500	2.500	0.315	14	B
	-6.00"-B2.00"-SN12-18	6.000	6.394	2.000	2.500	0.315	18	B
	-8.00"-C2.50"-SN12-22	8.000	8.394	2.500	2.500	0.315	22	C

Spare parts

Diameter ØD	Insert specifrication	Insert screw	Wrench	Sketch of installation
Ø2.00"~Ø2.50"	SN□X1205□□□-GL/GM/GH/W	IRM4×10	WT15IP	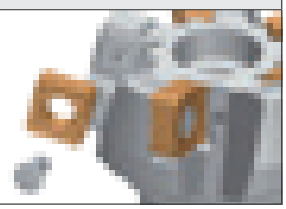
Ø3.00"~Ø6.00"			WT15IS	
Ø8.00"			WT15IT	

D

Selection of inserts

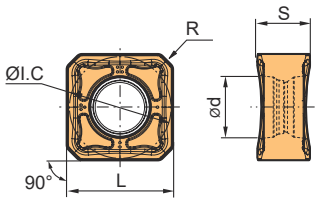

Workpiece material	Good working conditions	General working conditions	Adverse working conditions
P Steel	😐 😐	😐 😐 😐 😊	😟 😊 😊
M Stainless steel	😐 😐	😐 😐 😐 😐	😟 😟 😊 😊
K Cast iron	😐 😐 😟 😊		😟
N Ferrite materials			😐 😟
S Heat-resistant steel	😊	😐 😐 😐 😐	😐 😟

Insert shape	Type	Dimensions(inch)						Coated grade												Cermet		Cemented carbide	
		L	ØI.C	S	bs	ød	R	YBC302	YBM253	YBD152	YBD203	YBD252	YBG105	YBG202	YBG205	YBG205H	YB9320	YBG302	YBS203	YBS303	YNG151	YNG151C	YD101	YD201
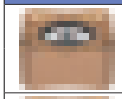	SNGX1205ENN-GL	0.500	0.500	0.256	-	0.232	0.031		●	●						●	●							
	SNMX120512-GL	0.500	0.500	0.256	-	0.232	0.047		●	●							●							
	SNGX1205ENN-GM	0.500	0.500	0.256	-	0.232	0.031		●	●	○					●	●			●				
	SNMX120512-GM	0.500	0.500	0.256	-	0.232	0.047		●	●						●	●			●				
	SNGX1205ENN-GH	0.500	0.500	0.256	-	0.232	0.031		●	●	○					●	●							
	SNMX120512-GH	0.500	0.500	0.256	-	0.232	0.047		●	●						●	●							
	SNGX1205ENN-W	0.539	0.500	0.189	0.195	0.232	0.047						●											

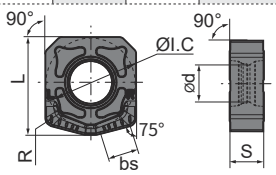

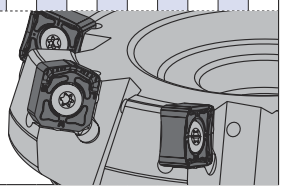

• Inserts can be assembled in both left and right side.

● Recommended grade ○ Produce according to order

Recommended cutting parameters

ISO	Workpiece material	Hardness HB	Grade	Cutting data			
				Vc (SFPM)	fz(IPT)		
					-GL	-GM	-GH
P	Low-carbon steel, Soft steel	⩽180	YBM253 YBG205H YB9320	880(720-1150)	0.006(0.004-0.012)	0.008(0.004-0.016)	0.012(0.008-0.02)
P	High-carbon steel, Alloy steel	180-280	YBM253 YBG205H YB9320	850(720-1050)	0.006(0.004-0.012)	0.008(0.004-0.016)	0.012(0.008-0.02)
P	Alloy tool steel	280-350	YBM253 YBG205H YB9320	780(590-980)	0.006(0.004-0.012)	0.008(0.004-0.016)	0.012(0.008-0.02)
M	Stainless steel	⩽270	YBM253 YBG205H YB9320	520(360-880)	0.004(0.003-0.008)	0.006(0.004-0.012)	0.008(0.004-0.012)
K	Cast iron, Ductile iron, High nickel cast iron	180-250	YBD152	880(490-980)	0.008(0.004-0.012)	0.012(0.004-0.016)	0.016(0.008-0.02)
S	Difficult-to-machine materials	⩽400	YBS303	330(200-400)	--	0.006(0.004-0.01)	--

Case for FME17

Workpiece: Transmission
The material of workpiece: 40cr(HRC25-40)
Processing part: Upper face
Tool: FME17-5.00"-B1.50"-SN12-14
Insert: SNGX1205ENN-GM/YB9320
Cutting parameter: Vc=835SFPM, fz=0.003IPT,
ap=0.197in, ae=2.953in
Type of cooling: External cooling

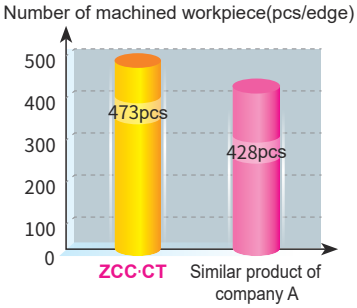

Face milling tools

Kr:90°

FMP01

P M K

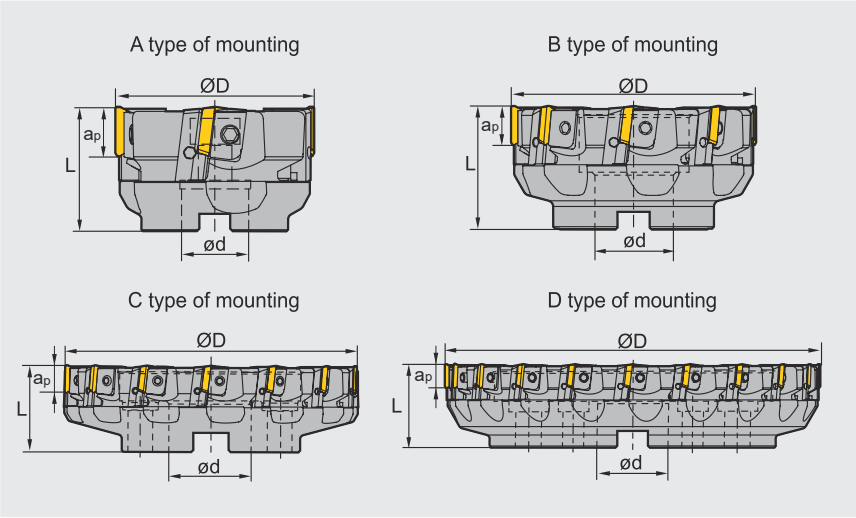

Specification of tools

Type		Dimensions(inch)					
		ØD	ød	L	apmax	Z (Number of teeth)	Mounting type
FMP01	**-3.00″-A1.00″-TP22-04**	3.000	1.000	2.500	0.709	4	A
	-4.00″-B1.25″-TP22-06	4.000	1.250	2.500	0.709	6	B
	-5.00″-B1.50″-TP22-08	5.000	1.500	2.500	0.709	8	B
	-6.00″-B1.50″-TP22-10	6.000	1.500	2.500	0.709	10	B
	-8.00″-C2.50″-TP22-12	8.000	2.500	2.500	0.709	12	C
	-10.00″-C2.50″-TP22-16	10.00	2.500	2.500	0.709	16	C
	-12.00″-D2.50″-TP22-20	12.00	2.500	2.750	0.709	20	D

Spare parts

Diameter ØD	Locator	Wedge	Wedge screw	Locator Screw	Wrench	Sketch of installation
Ø3.00″~Ø4.00″	LTP4R1/L1	W04R/L	WM8×17	LOM5×15.1	WT20T	
Ø5.00″~Ø12.00″	LTP4R/L	W04R/L	WM8×22	LOM5×15.1	WT25T	

D

Selection of inserts

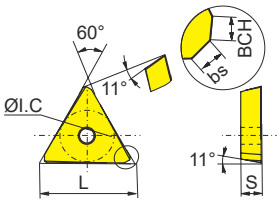

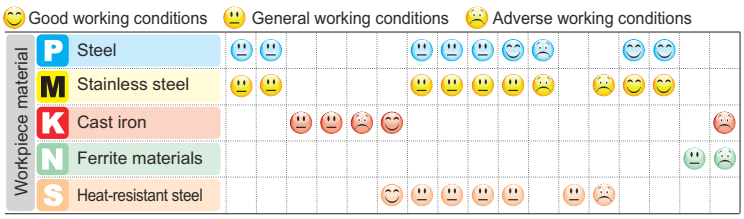

Insert shape	Type	Dimensions(inch)					Coated grade													Cermet		Cemented carbide	
		L	ØI.C	S	BCH	bs	YBC302	YBM253	YBD152	YBD203	YBD252	YBG105	YBG202	YBG205	YBG205H	YB9320	YBG302	YBS203	YBS303	YNG151	YNG151C	YD101	YD201
	TPKN2204PDFR	0.266	0.500	0.187	0.055	0.028						●											
	TPKN2204PDFL	0.266	0.500	0.187	0.055	0.028						●											
	TPKN2204PDR	0.266	0.500	0.187	0.055	0.028	●	●				●	●	●			●						
	TPKN2204PDL	0.266	0.500	0.187	0.055	0.028	●							●									
	TPKN2204PDTR	0.266	0.500	0.187	0.055	0.028	●																
	TPKN2204PDTL	0.266	0.500	0.187	0.055	0.028	●																
	TPMR2204PDSL	0.266	0.500	0.187	0.055	0.028	○	○															
	TPMR2204PDSR	0.266	0.500	0.187	0.055	0.028	○	○															

● Recommended grade ○ Produce according to order

D

Recommended cutting parameters

Workpiece material		Hardness HB	Insert grade	Cutting parameters	
				V(m/min)	f(mm/z)
P	Low-carbon steel, Soft steel	≤180	YBC302	900 (700-1100)	0.008 (0.004-0.016)
			YBM253	700 (600-1000)	0.008 (0.003-0.012)
			YBG202	900 (700-1200)	0.008 (0.004-0.012)
	High-carbon steel, Alloy steel	180—280	YBC302	800 (650-1100)	0.008 (0.004-0.016)
			YBM253	650 (500-920)	0.008 (0.003-0.012)
			YBG202	800 (600-1100)	0.008 (0.004-0.012)
	Alloy tool steel	280—350	YBC302	700 (600-1000)	0.008 (0.004-0.016)
			YBM253	600 (490-800)	0.008 (0.003-0.012)
			YBG202	700 (550-1000)	0.008 (0.004-0.012)
M	Stainless steel	≤270	YBM253	460 (320-780)	0.008 (0.003-0.012)
			YBG202	460 (320-800)	0.008 (0.004-0.012)
K	Cast iron	180—250	YBG105	680 (400-980)	0.008 (0.004-0.012)
			YBG302	520 (400-650)	0.014 (0.004-0.016)
			YD201	320 (260-520)	0.01 (0.006-0.016)

Face milling tools

FMP02

P M K N

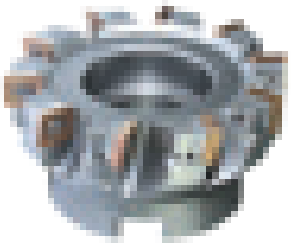

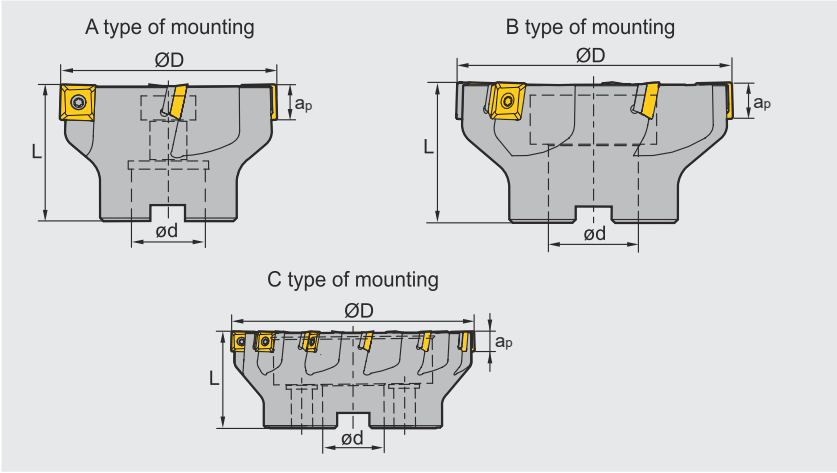

Specification of tools

Type		Dimensions(inch)					
		ØD	ød	L	$a_p$max	Z (Number of teeth)	Mounting type
FMP02	**-2.00"-A0.75"-SE09-05**	2.000	0.750	1.500	0.285	5	A
	-2.50"-A1.00"-SE09-06	2.500	1.000	1.500	0.285	6	A
	-3.00"-A1.00"-SE09-08	3.000	1.000	2.000	0.285	8	A
	-4.00"-B1.25"-SE09-10	4.000	1.250	2.000	0.285	10	B
	-5.00"-B1.50"-SE09-12	5.000	1.500	2.500	0.285	12	B
	-6.00"-C1.50"-SE09-14	6.000	1.500	2.500	0.285	14	C
Coarse pitch	**-2.00"-A0.75"-SE12-03**	2.000	0.750	1.500	0.425	3	A
	-2.50"-A1.00"-SE12-04	2.500	1.000	1.500	0.425	4	A
	-3.00"-A1.00"-SE12-06	3.000	1.000	2.000	0.425	6	A
	-4.00"-B1.25"-SE12-07	4.000	1.250	2.000	0.425	7	B
	-5.00"-B1.50"-SE12-08	5.000	1.500	2.500	0.425	8	B
	-6.00"-C1.50"-SE12-12	6.000	1.500	2.500	0.425	12	C
	-8.00"-C2.50"-SE12-14	8.000	2.500	2.500	0.425	14	C
	-10.00"-C2.50"-SE12-16	10.00	2.500	2.500	0.425	16	C
Close pitch	**-2.00"-A1.00"-SE12-04**	2.000	1.000	1.500	0.425	4	A
	-2.50"-A1.00"-SE12-05	2.500	1.000	1.500	0.425	5	A
	-3.00"-A1.00"-SE12-08	3.000	1.000	2.000	0.425	8	A
	-4.00"-B1.25"-SE12-10	4.000	1.250	2.000	0.425	10	B
	-5.00"-B1.50"-SE12-12	5.000	1.500	2.500	0.425	12	B
	-6.00"-C1.50"-SE12-15	6.000	1.500	2.500	0.425	15	C
	-8.00"-C2.50"-SE12-16	8.000	2.500	2.500	0.425	16	C
	-10.00"-C2.50"-SE12-18	10.00	2.500	2.500	0.425	18	C

Spare parts

Diameter ØD	Insert specification	Shim	Insert screw	Shim screw	Wrench		Sketch of installation
							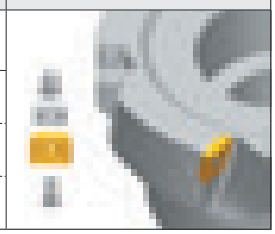
Ø2.00"~Ø6.00"	SE09	---	I60M3×7	---	WT09IS	---	
Ø2.00"	SE12	---	I60M3.5×10	---	WT15IS	---	
Ø2.50"~Ø10.00"		S12BSX	I60M3.5×12	SM5×7XA		WH35L	

D

Selection of inserts

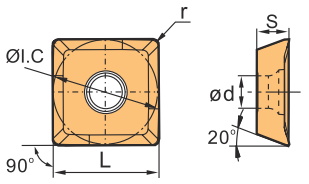

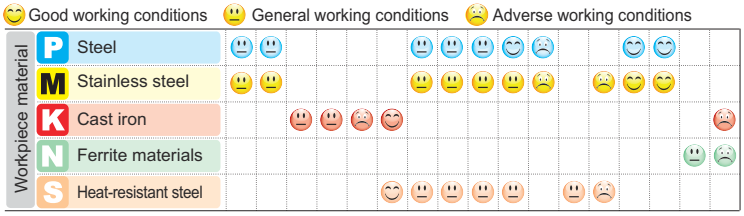

Insert shape	Type	Dimensions(inch)					Coated grade													Cermet		Cemented carbide	
		L	ØI.C	S	ød	r	YBC302	YBM253	YBD152	YBD203	YBD252	YBG105	YBG202	YBG205	YBG205H	YB9320	YBG302	YBS203	YBS303	YNG151	YNG151C	YD101	YD201
	SEET09T308PER-APF	0.375	0.375	0.158	0.13	0.031			●				●			●							
	SEET120308PER-APF	0.524	0.524	0.159	0.161	0.031			●				●			●							
	SEET09T308PER-APM	0.375	0.375	0.158	0.13	0.031			●	○			●			●							
	SEET120308PER-APM	0.524	0.524	0.159	0.161	0.031			●	○			●			●							
	SEET09T308PER-APR	0.375	0.375	0.158	0.13	0.031			●	○			●			●							
	SEET120308PER-APR	0.524	0.524	0.159	0.161	0.031			●	○			●			●							
	SEET120308-LH	0.524	0.524	0.159	0.161	0.031																●	

● Recommended grade ○ Produce according to order

D

Chipbreaker selection for FMP02 milling inserts

Classification \ Function	For finishing	For semi-finishing	For roughing
P	-APF	-APM 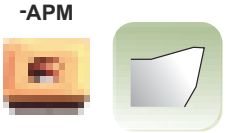	-APR 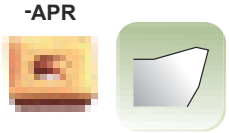
M			
K			
N	-LH		

Recommended cutting parameters

Workpiece material		Hardness HB	Insert grade	Cutting parameters			
				V(SFPM)	f(IPT)		
					-APF	-APM	-APR
P	Low-carbon steel, soft steeel	≤180	YBG202	900(650-1200)	0.006(0.004-0.008)	0.008 (0.004-0.012)	0.012 (0.008-0.016)
			YB9320	900(650-1200)	0.006(0.004-0.008)	0.008 (0.004-0.012)	0.012 (0.008-0.016)
	High-carbon steel, alloy steel	180-280	YBM253	750 (660-1000)	0.006(0.004-0.008)	0.008 (0.004-0.012)	0.012 (0.008-0.016)
			YBG202	800 (600-1150)	0.006(0.004-0.008)	0.008 (0.004-0.012)	0.012 (0.008-0.016)
			YB9320	800 (600-1150)	0.006(0.004-0.008)	0.008 (0.004-0.012)	0.012 (0.008-0.016)
	Alloy tool steel	280-350	YBM253	700 (600-1000)	0.004(0.004-0.008)	0.008 (0.004-0.012)	0.012 (0.008-0.016)
			YBG202	700 (550-1100)	0.004(0.004-0.008)	0.008 (0.004-0.012)	0.012 (0.008-0.016)
			YB9320	700 (550-1100)	0.004(0.004-0.008)	0.008 (0.004-0.012)	0.012 (0.008-0.016)
M	Stainless steel	≤270	YBM253	500 (400-800)	0.004(0.004-0.008)	0.008 (0.004-0.012)	0.012 (0.008-0.016)
			YBG202	500 (350-900)	0.004(0.004-0.008)	0.008 (0.004-0.012)	0.012 (0.008-0.016)
			YB9320	500 (350-900)	0.004(0.004-0.008)	0.008 (0.004-0.012)	0.012 (0.008-0.016)
K	Cast iron	180-250	YBG202	500 (400-650)	0.006(0.004-0.008)	0.008 (0.004-0.012)	0.012 (0.008-0.016)
			YBD152	900 (500-1000)	0.006(0.004-0.008)	0.008 (0.004-0.012)	0.012 (0.008-0.016)
N	Al alloy steel	--	YD101	1000-	-LH		
					0.01 (0.004-0.016)		

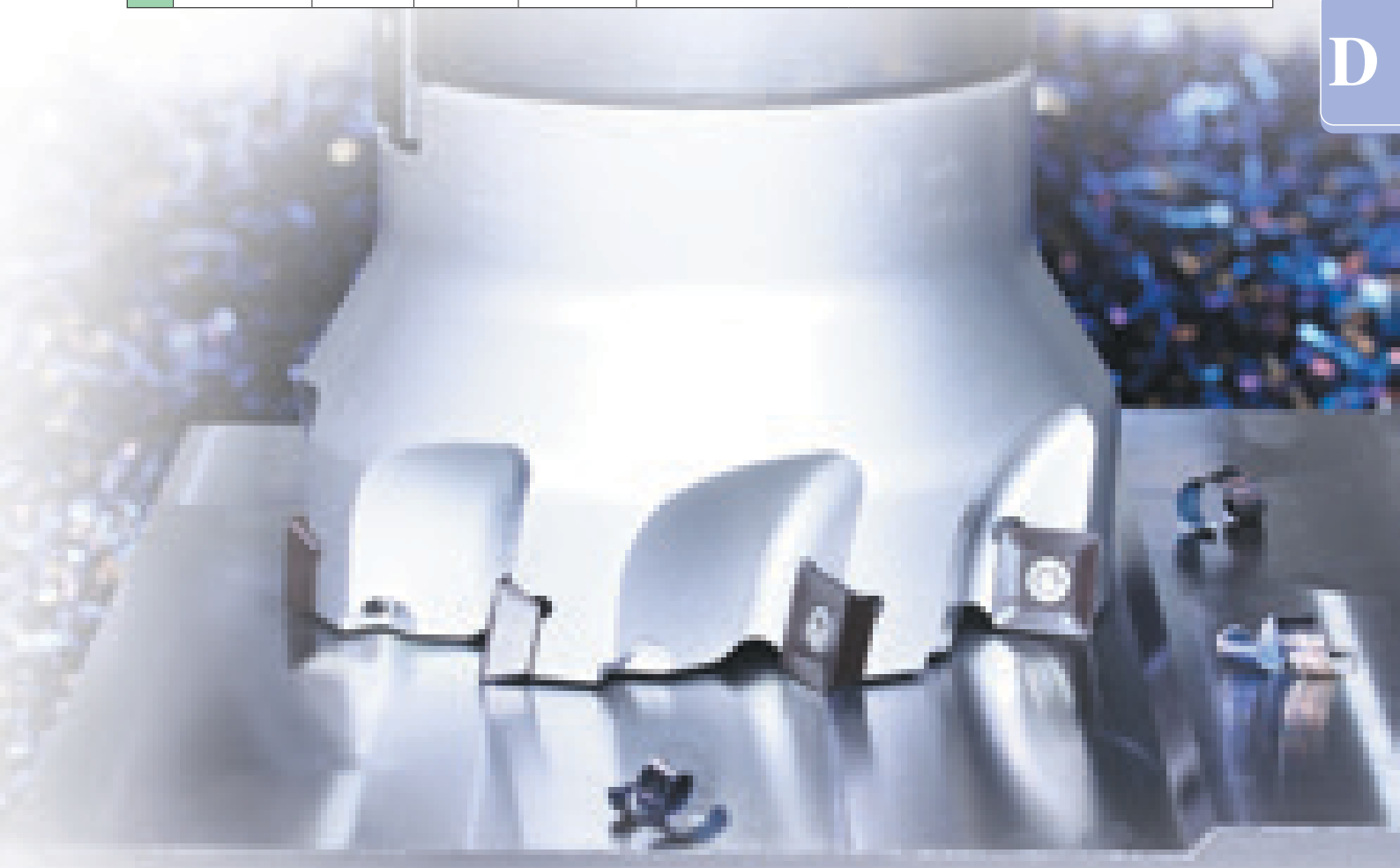

Face milling tools

Kr:90°

FMP03

P M K

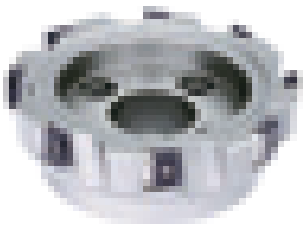

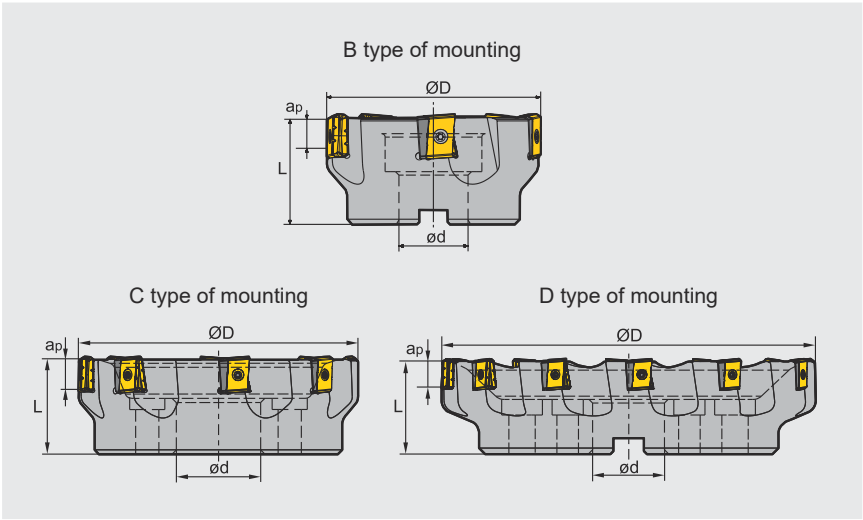

Specification of tools

Type		Dimensions(inch)					
		ØD	ød	L	$a_p$max	Z (Number of teeth)	Mounting type
FMP03	-5.00"-B1.5"-LN15-06	5.00	1.50	2.50	0.512	6	B
	-6.00"-C1.5"-LN15-08	6.00	1.50	2.50	0.512	8	C
	-8.00"-C2.5"-LN15-10	8.00	2.50	2.75	0.512	10	C
	-10.00"-C2.5"-LN15-12	10.00	2.50	2.75	0.512	12	C
	-12.00"-D2.5"-LN15-16	12.00	2.50	3.15	0.512	16	D
	-5.00"-B1.5"-LN20-06	5.00	1.50	2.50	0.669	6	B
	-6.00"-C1.5"-LN20-08	6.00	1.50	2.50	0.669	8	C
	-8.00"-C2.5"-LN20-10	8.00	2.50	2.75	0.669	10	C
	-10.00"-C2.5"-LN20-12	10.00	2.50	2.75	0.669	12	C
	-12.00"-D2.5"-LN20-15	12.00	2.50	3.15	0.669	15	D
	-5.00"-B1.5"-LN25-05	5.00	1.50	2.50	0.866	5	B
	-6.00"-C1.5"-LN25-06	6.00	1.50	2.50	0.866	6	C
	-8.00"-C2.5"-LN25-08	8.00	2.50	2.75	0.866	8	C
	-10.00"-C2.5"-LN25-10	10.00	2.50	2.75	0.866	10	C
	-12.00"-D2.5"-LN25-12	12.00	2.50	3.15	0.866	12	D

Spare parts

Insert specification	Shim	Shim screw	Insert screw	Wrench		Sketch of installation
LNKT1506EN-ZR	LLN15-ZR	I60M3×7	I60M4×12	WT15IS	WT09IS	
LNKT2007DN-ZR	LLN20R-ZR	I60M3×7	I60M4×15	WT15IS	WT09IS	
LNKT2510-ZR	LLN25R-ZR	I60M3.5×10.4	I60M5×17	WT20IT	WT15IS	

Selection of inserts

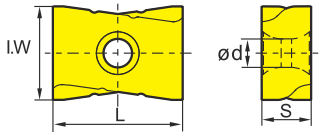

Good working conditions | General working conditions | Adverse working conditions

Workpiece material		YBC302	YBM253	YBD152	YBD203	YBD252	YBG105	YBG202	YBG205	YBG205H	YB9320	YBG302	YBS203	YBS303	YNG151	YNG151C	YD101	YD201
P	Steel	General	General					Good	General	General	Good	Adverse			Good	Good		
M	Stainless steel	General	General					General	General	General	General	Adverse		Adverse	Good	Good		
K	Cast iron			General	General	Adverse	Good											Adverse
N	Ferrite materials																General	Adverse
S	Heat-resistant steel						Good	General	General	General	General		General	Adverse				

Insert shape	Type	Dimensions(inch)				Coated grade													Cermet		Cemented carbide	
		L	ØI.C	S	ød	YBC302	YBM253	YBD152	YBD203	YBD252	YBG105	YBG202	YBG205	YBG205H	YB9320	YBG302	YBS203	YBS303	YNG151	YNG151C	YD101	YD201
	LNKT1506EN-ZR	0.625	0.551	0.25	0.181			○								●						
	LNKT2007DN-ZR	0.787	0.669	0.313	0.181		○									●						
	LNKT2510-ZR	0.984	0.709	0.375	0.217					○						●						

● Recommended grade ○ Produce according to order

Recommended cutting parameters

Workpiece material		Hardness HB	Insert grade	Cutting parameters	
				V(SFPM)	f(IPT)
P	Low-carbon steel, Soft steel	≤180	YBG302	600 (500-1000)	0.02 (0.008-0.031)
			YBM253	600 (500-1000)	0.02 (0.008-0.031)
	High-carbon steel, Alloy steel	180-280	YBG302	500 (400-900)	0.02 (0.008-0.031)
			YBM253	450 (400-900)	0.02 (0.008-0.031)
	Alloy tool steel	280-350	YBG302	400 (250-800)	0.018 (0.008-0.024)
			YBM253	300 (250-800)	0.018 (0.008-0.024)
M	Stainless steel	≤270	YBG302	400 (250-650)	0.018 (0.008-0.024)
			YBM253	300 (250-650)	0.018 (0.008-0.024)
K	Cast iron	180-250	YBD152	700 (500-1000)	0.02 (0.008-0.031)
			YBD252	680 (500-1000)	0.02 (0.008-0.031)
			YBG302	650 (500-1000)	0.02 (0.008-0.031)

Note: Cutting parameters can be adjusted according to the Max. power of machine.

Case for FMP03

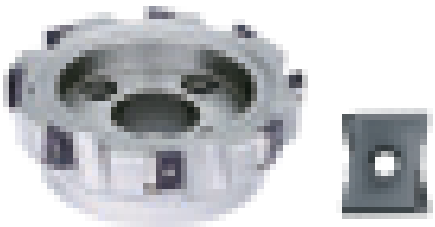

Tool type: FMP03-8"-C2.5"-LN25-08

Insert type/grade: LNKT2510-ZR/YBG302

The tool operates easily and fast at high cutting depth with good chip breaking performance. Cutting efficiency is doubled, and tool life increases to 1-2 times that of the original.

Workpiece material: 45#
Hardness(HB): 190
Cooling system: Dry cutting
Cutting parameters: V_c=420SFPM, a_p=0.047in, f_z=0.02IPT, a_e=5.51in

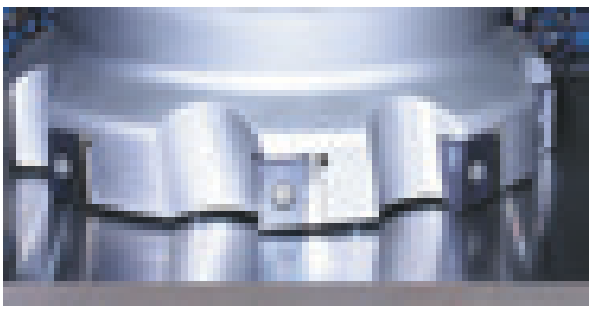

D

FMP08 Series

Special Milling Cutter for Finishing Machining of Cast Iron

90° Lead Angle, suitable for finish face milling, square shoulder milling and layered milling

Equipped with fine-tuning mechanism for micron-level adjustment, easy operation

Vertically mounted reversible inserts with 8 cutting edges for superior cost efficiency

Double-sided 8 cutting edges

4 × 2=8 cutting edges

Face milling tools

Kr:90°

FMP08 K

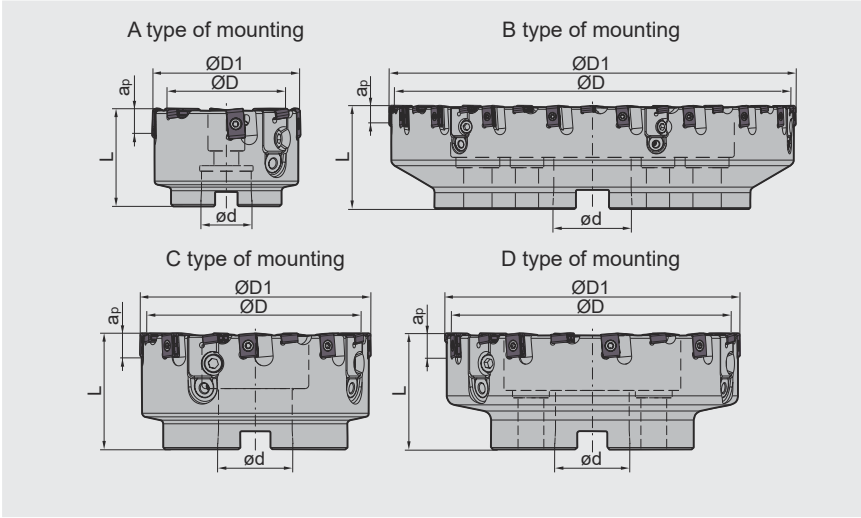

Specification of tools

Type		Dimensions(inch)						
		ØD1	ØD	ød	L	Z (Number of teeth)	Number of Wiper Teeth	Mounting type
FMP08	-3.00"-A1.00"-LN12-08W2C	3.00	2.508	1.00	2.00	8	2	A
	-4.00"-A1.25"-LN12-12W3C	4.00	3.492	1.25	2.00	12	3	A
	-5.00"-B1.50"-LN12-16W4	5.00	4.803	1.50	2.50	16	4	B
	-6.00"-B1.50"-LN12-20W5	6.00	5.484	1.50	2.50	20	5	B
	-8.00"-C2.50"-LN12-28W7	8.00	7.484	2.50	2.50	28	7	C
	-10.00"-C2.50"-LN12-36W9	10.00	9.484	2.50	2.50	36	9	C
	-12.00"-D2.50"-LN12-44W11	12.00	11.480	2.50	3.00	44	11	D
	-3.00"-A1.00"-LN15-08W2C	3.00	2.390	1.00	2.00	8	2	A
	-4.00"-A1.25"-LN15-12W3C	4.00	3.370	1.25	2.00	12	3	A
	-5.00"-B1.50"-LN15-16W4	5.00	4.366	1.50	2.50	16	4	B
	-6.00"-B1.50"-LN15-20W5	6.00	5.362	1.50	2.50	20	5	B
	-8.00"-C2.50"-LN15-28W7	8.00	7.358	2.50	2.50	28	7	C
	-10.00"-C2.50"-LN15-36W9	10.00	9.358	2.50	2.50	36	9	C
	-12.00"-D2.50"-LN15-44W11	12.00	11.354	2.50	3.00	44	11	D

Note:
ØD: Effective cutting diameter of wiper edge
ØD1: Maximum diameter of cutting inserts

Spare parts

Insert	Insert clamping screw	Cartridge	Cartridge adjusting screw	Cartridge clamping screw	Adjustment block	Wrench		
LNEX120408PN-GM	I60M4×10	LOCATOR-LN120408R	M6×20 (GB70-85)	DM6×20A	ADJ01	WT09IP	WT15IS	WH50L
LNEX150416PN-GM		LOCATOR-LN150904R						

D

Selection of inserts

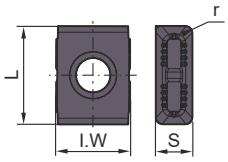

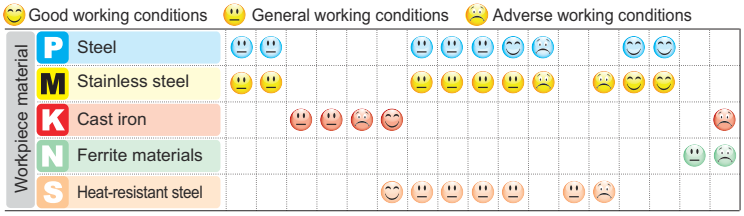

Insert shape	Type	Dimensions(inch)				Coated grade													Cermet		Cemented carbide	
		L	I.W	S	r	YBC302	YBM253	YBD152	YBD203	YBD252	YBG105	YBG202	YBG205	YBG205H	YB9320	YBG302	YBS203	YBS303	YNG151	YNG151C	YD101	YD201
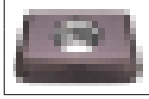	LNEX120408PN-GM	0.500	0.375	0.189	0.031		○	○			○	○		○	○							
	LNEX150416PN-GM	0.625	0.375	0.189	0.063		○	○			○	○		○	○							

● Recommended grade ○ Produce according to order

Recommended cutting parameters

Workpiece material		Hardness HB	Insert grade	Cutting parameters	
				V(m/min)	f(mm/z)
K	Cast iron	180-250	YBG105	656(492-820)	0.012(0.004-0.020)

D

Case for FMP08

Application Case 1

Workpiece: Engine Middle Frame
Work Material: HT250 Gray Cast Iron + Aluminum Alloy
Cooling Method: Water Cooling
Original Tool: European & American Brand Cutters
Test Cutter: FMP08-5.00"-B1.50"-LN12-16W4
Test Insert: PG9005/LNEX120408PN-GM
Cutting Parameters: Vc=1312 SFPM,
F=47 IPM,
Ap=0.0197 inch

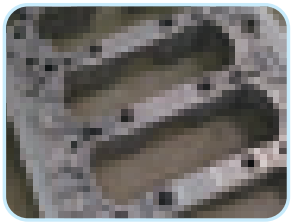

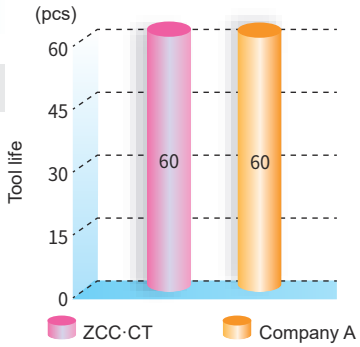

Conclusion: Machining precision meets customer requirements; tool service life is equivalent to the original imported tools with remarkable cost-performance advantages.

Application Case 2

Workpiece: Oil extractor cylinder head
Work Material: RuT450 vermicular graphite cast iron
Cooling Method: Water cooling
Original Tool: European and American brand milling cutters
Test Cutter: FMP08-12.00"-D2.50"-LN15-44W11
Test Insert: PG9005/LNEX150416PN-GM
Cutting Parameters: Vc=525 SFPM,
F=23.6 IPM,
Ap=0.0118 inch

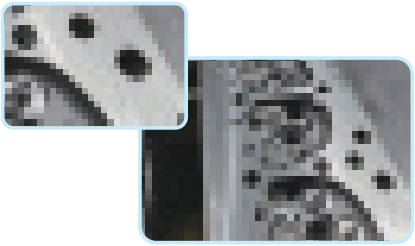

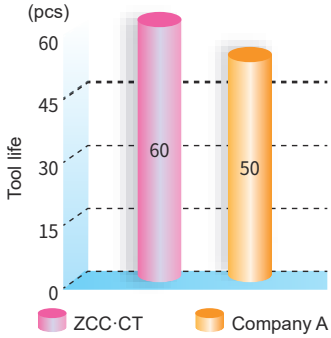

Conclusion: Compared with the original imported tools, the tool life is increased by approximately 20%, which effectively reduces tooling cost. Recommended for application.

FMP12 Series Milling Tools

Kr:90°

- Double negative angle of the cutter, combined with unique insert structure, to achieve double positive tool angle, which is beneficial to reducing cutting force;
- 6-flute cutting double-sided slot milling inserts, enabling high-quality 90° square shoulder milling, face milling and slot milling;
- Insert with wiper enables large feed and better surface finish.

Application case

Tool specification：FMP12-3.00"-A1.00"-WN08-05C

Insert specification/grade：WNHU080608PNR-GM/YBD152

Part Name: Turbine Housing

Workpiece material：QT450

Hardness：HB230-280

Cooling : Dry cutting

Machine: Vertical machining center

Cutting data：Vc=850SFPM，ap=0.04in，fz=0.004IPT，ae=1.18in

Milling style: Down milling Area of machining: End surface

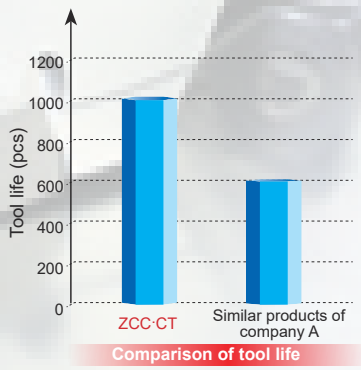

Comparison of tool life

Face milling tools

FMP12

P K N

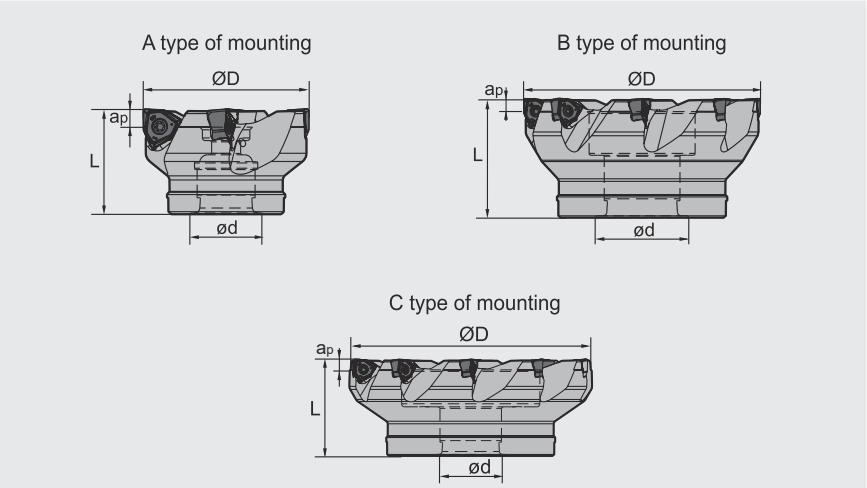

Specification of tools

Type		Dimensions(inch)					
		ØD	ød	L	$a_p$max	Z (Number of teeth)	Interface form
FMP12	-2.00"-A0.75"-WN06-05C	2.00	0.75	1.75	0.224	5	A
	-2.50"-A0.75"-WN06-06C	2.50	0.75	1.75	0.224	6	A
	-2.50"-A1.00"-WN06-06C	2.50	1.00	2.00	0.224	6	A
	-3.00"-A1.00"-WN06-07C	3.00	1.00	2.00	0.224	7	A
	-4.00"-B1.25"-WN06-09	4.00	1.25	2.00	0.224	9	B
	-5.00"-B1.50"-WN06-11	5.00	1.50	2.50	0.224	11	B
	-6.00"-C1.50"-WN06-14	6.00	1.50	2.50	0.224	14	C
	-2.50"-A0.75"-WN08-05C	2.50	0.75	1.75	0.303	5	A
	-2.50"-A1.00"-WN08-05C	2.50	1.00	2.00	0.303	5	A
	-3.00"-A1.00"-WN08-06C	3.00	1.00	2.00	0.303	6	A
	-4.00"-B1.25"-WN08-08	4.00	1.25	2.00	0.303	8	B
	-5.00"-B1.50"-WN08-10	5.00	1.50	2.50	0.303	10	B
	-6.00"-C1.50"-WN08-12	6.00	1.50	2.50	0.303	12	C

Spare parts

Diameter ØD	Insert specifrication	Insert tightening screw	Wrench	Sketch of installation
				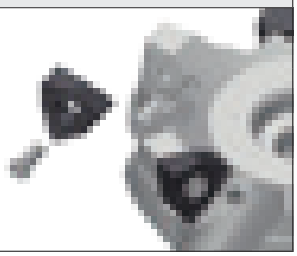
Ø2.00"~Ø6.00"	WNHU06□□□□PNR-GM	I60M3×9	WT09IS	
Ø2.50"~Ø6.00"	WNHU08□□□□PNR-GM/LH	I60M4×10	WT15IS	

D

Face milling tools

FMP12

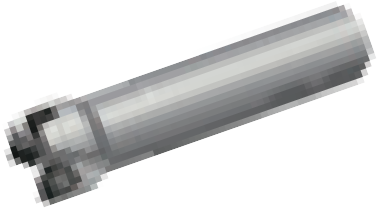

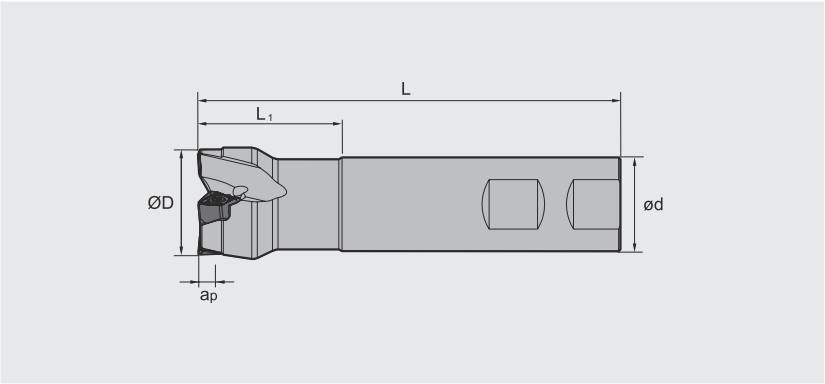

Specification of tools

Type		Dimensions(inch)					
		ØD	ød	L	L1	apmax	Z (Number of teeth)
FMP12	**-1.00"-XP1.00"-WN06-02C**	1.00	1.00	4.0	1.25	0.224	2
	-1.25"-XP1.00"-WN06-03C	1.25	1.00	4.5	1.50	0.224	3
	-1.50"-XP1.25"-WN06-04C	1.50	1.25	4.5	1.50	0.224	4
	-2.00"-XP1.50"-WN06-05C	2.00	1.50	4.5	1.50	0.224	5

Spare parts

Diameter ØD	Insert specifrication	Insert tightening screw	Wrench	Sketch of installation
Ø1.00"~Ø2.00"	WNHU06□□□□PNR-GM	I60M3×9	WT09IS	

D

Selection of inserts

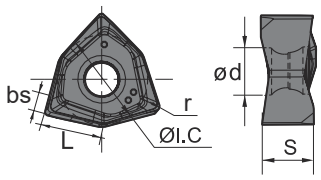

😊 Good working conditions 😐 General working conditions ☹️ Adverse working conditions

Workpiece material	YBC302	YBM253	YBD152	YBD203	YBD252	YBG105	YBG202	YBG205	YBG205H	YB9320	YBG302	YBS203	YBS303	YNG151	YNG151C	YD101	YD201
P Steel	😐	😐					😐	😐	😐	😊	☹️			😊	😊		
M Stainless steel	😐	😐					😐	😐	😐	😐	☹️		☹️	😊	😊		
K Cast iron			😐	😐	☹️	😊											☹️
N Ferrite materials																😐	☹️
S Heat-resistant steel						😊	😐	😐	😐	😐		😐	☹️				

Insert shape	Type	Dimensions(inch)						Coated grade												Cermet		Cemented carbide	
		L	ØI.C	S	ød	bs	r	YBC302	YBM253	YBD152	YBD203	YBD252	YBG105	YBG202	YBG205	YBG205H	YB9320	YBG302	YBS203	YBS303	YNG151	YNG151C	YD101	YD201
	WNHU060404PNR-GM	0.224	0.375	0.157	0.138	0.053	0.016		●	●					●		●							
	WNHU060408PNR-GM	0.224	0.375	0.157	0.138	0.053	0.031		●	●					●		●							
	WNHU080608PNR-GM	0.303	0.500	0.213	0.173	0.063	0.031		●	●					●		●							
	WNHU080612PNR-GM	0.303	0.500	0.213	0.173	0.063	0.047		●	●					●		●							
	WNHU080616PNR-GM	0.303	0.500	0.213	0.173	0.063	0.063		●	●					●		●							
	WNHU080608PNR-LH	0.303	0.500	0.213	0.173	0.063	0.031																●	

● Recommended grade ○ Produce according to order

D

Recommended cutting parameters

Workpiece material		Hardness HB	Insert grade	Cutting parameters		
				V(SFPM)	f(IPT)	ap_{max}(in)
P	Low-carbon steel, Soft steel	⩽180	YBM253 YBG205 YB9320	900 (700-1150)	0.008 (0.004-0.016)	0.224(WN06) 0.303(WN08)
P	High-carbon steel, Alloy steel	180-280	YBM253 YBG205 YB9320	850 (650-1100)	0.008 (0.004-0.016)	
P	Alloy tool steel	280-350	YBM253 YBG205 YB9320	750 (600-1000)	0.008 (0.004-0.016)	
K	Cast iron	180-250	YBD152	900 (500-1000)	0.008 (0.004-0.016)	
N	Al alloy steel	--	YD101	1000-	0.01 (0.004-0.016)	

Face milling tools

Kr:88°

FMP17 P M K S

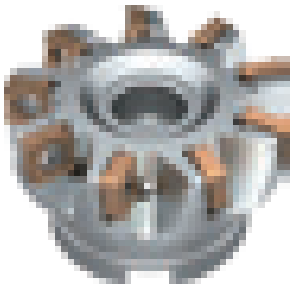

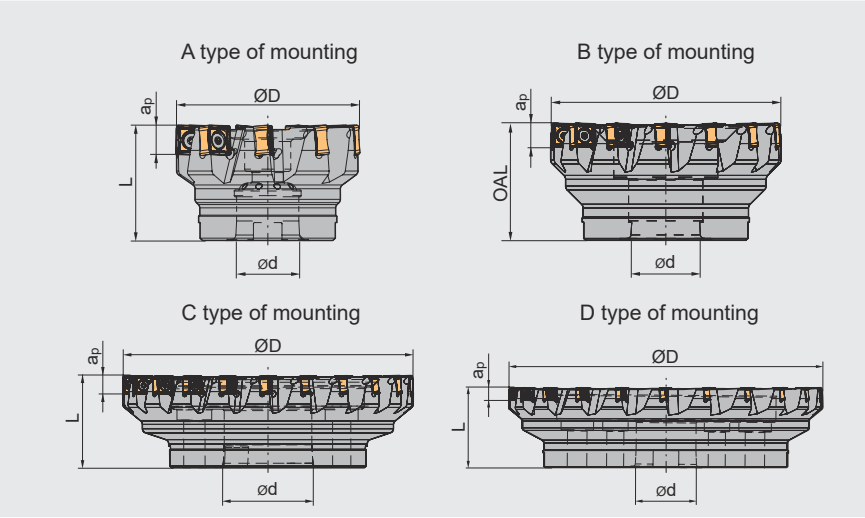

Specification of tools

Type		Dimensions(inch)					
		ØD	ød	L	$a_p$max	Z (Number of teeth)	Mounting type
FMP17 Coarse pitch	**-2.00"-A0.75"-SN12-04C**	2.000	0.750	1.750	0.413	4	A
	-2.50"-A0.75"-SN12-05C	2.500	0.750	1.750	0.413	5	A
	-3.00"-A1.00"-SN12-07C	3.000	1.000	2.000	0.413	7	A
	-4.00"-A1.25"-SN12-08C	4.000	1.250	2.000	0.413	8	A
	-5.00"-B1.50"-SN12-10	5.000	1.500	2.500	0.413	10	B
	-6.00"-B2.00"-SN12-12	6.000	2.000	2.500	0.413	12	B
	-8.00"-C2.50"-SN12-14	8.000	2.500	2.500	0.413	14	C
	-10.00"-C2.50"-SN12-18	10.000	2.500	2.500	0.413	18	C
	-12.00"-D2.50"-SN12-22	12.000	2.500	2.500	0.413	22	D

Spare parts

Diameter ØD	Insert specifrication	Insert tightening screw	Wrench	Sketch of installation
				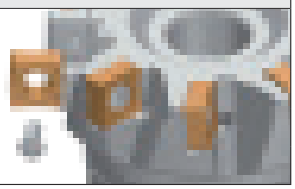
Ø2.00"~Ø2.50"	SNGX□□PNN-GH/GL/GM SNMX□□□-GH/GL/GM	IRM4×10	WT15IP	
Ø3.00"~Ø5.00"			WT15IS	
Ø6.00"~Ø12.00"			WT15IT	

D

Face milling tools

Kr:88°

FMP17 P M K S

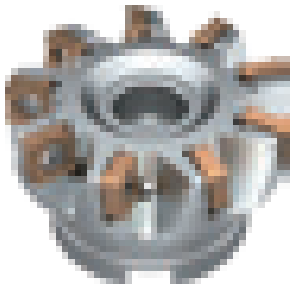

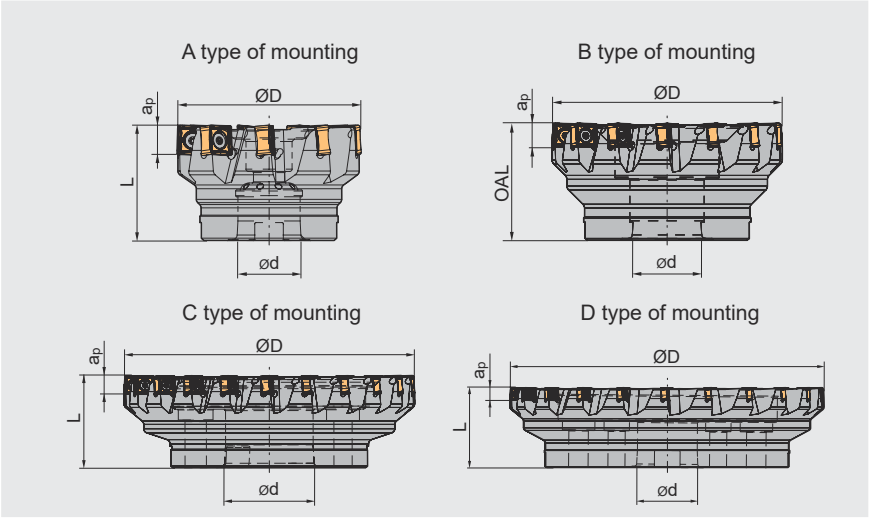

Specification of tools

Type		Dimensions(inch)					
		ØD	ød	L	$a_p$max	Z (Number of teeth)	Mounting type
FMP17 Close pitch	**-2.00"-A0.75"-SN12-05C**	2.000	0.750	1.750	0.413	5	A
	-2.50"-A0.75"-SN12-07C	2.500	0.750	1.750	0.413	7	A
	-3.00"-A1.00"-SN12-09C	3.000	1.000	2.000	0.413	9	A
	-4.00"-A1.25"-SN12-11C	4.000	1.250	2.000	0.413	11	A
	-5.00"-B1.50"-SN12-14	5.000	1.500	2.500	0.413	14	B
	-6.00"-B2.00"-SN12-18	6.000	2.000	2.500	0.413	18	B
	-8.00"-C2.50"-SN12-22	8.000	2.500	2.500	0.413	22	C
Finishing cutter (With wiper inserts)	**-5.00"-B1.50"-SN12-14W2**	5.000	1.500	2.500	0.413	12+2	B
	-6.00"-C1.50"-SN12-18W3	6.000	1.500	2.500	0.413	15+3	C
	-8.00"-C2.50"-SN12-24W4	8.000	2.500	2.500	0.413	20+4	C

Spare parts

Diameter ØD	Insert specifrication	Insert tightening screw	Wrench	Sketch of installation
				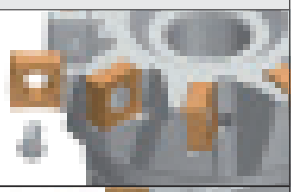
Ø2.00"~Ø2.50"	SNGX□□PNN-GH/GL/GM SNMX□□□-GH/GL/GM	IRM4×10	WT15IP	
Ø3.00"~Ø5.00"			WT15IS	
Ø6.00"~Ø12.00"			WT15IT	

Diameter of the finishing cutter ØD	Insert specifrication	Insert tightening screw	Wedge screw	Adjustment block	Wrench	Sketch of installation
Ø5.00"~Ø8.00"	SNG□□XPNN-GH/GL/GM SNMX□□□-GH/GL/GM SNCU120420-W4	IRM4×10	DM6×20A	ADJ-M6×1.0A	WT15IT	

D

Selection of inserts

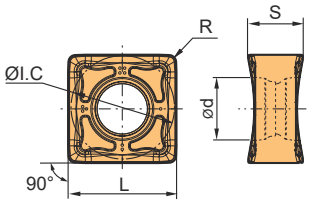

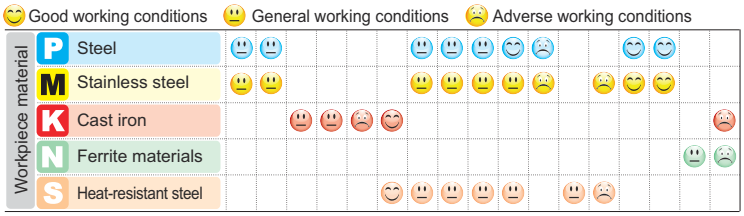

Insert shape	Type	Dimensions(inch)						Coated grade													Cermet		Cemented carbide	
		L	ØI.C	S	bs	ød	R	YBC302	YBM253	YBD152	YBD203	YBD252	YBG105	YBG202	YBG205	YBG205H	YB9320	YBG302	YBS203	YBS303	YNG151	YNG151C	YD101	YD201
	SNGX1205PNN-GL	0.500	0.500	0.256	-	0.232	0.031		●	●						●	○	●						
	SNMX120512-GL	0.500	0.500	0.256	-	0.232	0.047		●	●	○						○	●						
	SNGX1205PNN-GM	0.500	0.500	0.256	-	0.232	0.031		●	●	○					●	○	●		●				
	SNMX120512-GM	0.500	0.500	0.256	-	0.232	0.047		●	●	○					●	○	●		●				
	SNGX1205PNN-GH	0.500	0.500	0.256	-	0.232	0.031		●	●	○					●	○	●						
	SNMX120512-GH	0.500	0.500	0.256	-	0.232	0.047		●	●	○					●	○	●						
	SNCU120420-W4	0.500	0.500	0.189	-	0.232	0.079						●											
	SNGX1205PNN-W	0.506	0.500	0.189	0.168	0.232	0.047										●							

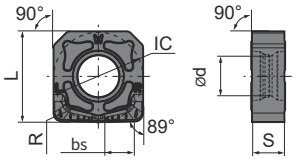

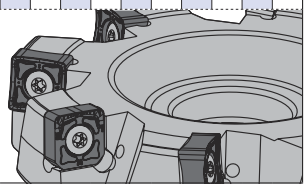

● Recommended grade ○ Produce according to order

- Neutral insert for both left and right cutters;
- -W4 wiper insert is used in finishing cutter with adjustable wedge;
- -W wiper insert is used in normal cutter for finishing.

D

Recommended cutting parameters

Workpiece material		Hardness HB	Insert grade	Cutting parameters			
				V_c(SFPM)	f_z(IPT)		
					-GL	-GM	-GH
P	Low-carbon steel, Soft steel	≤180	YBM253 YBG205H YB9320	880(720-1150)	0.006(0.004-0.012)	0.008(0.004-0.016)	0.012(0.008-0.02)
P	High-carbon steel, Alloy steel	180-280	YBM253 YBG205H YB9320	850(720-1050)	0.006(0.004-0.012)	0.008(0.004-0.016)	0.012(0.008-0.02)
P	Alloy tool steel	280-350	YBM253 YBG205H YB9320	780(590-980)	0.006(0.004-0.012)	0.008(0.004-0.016)	0.012(0.008-0.02)
M	Stainless steel	≤270	YBM253 YBG205H YB9320	520(360-880)	0.004(0.003-0.008)	0.006(0.004-0.012)	0.008(0.004-0.012)
K	Cast iron, Ductile iron, High nickel cast iron	180-250	YBD152	880(490-980)	0.008(0.004-0.012)	0.012(0.004-0.016)	0.016(0.008-0.02)
S	Hard-to-cut material	≤400	YBS203 YBS303	330(200-400)	--	0.006(0.004-0.01)	--

Case for FMP17

Workpiece: Truck axle housing

Workpiece material: QT600(HB250)

Tool type: FMP17-4.00"-A1.25"-SN12-08C

Insert: SNGX1205PNN-GM/YB9320

Cutting parameters: Vc=875SFPM, fz=0.007IPT,
ap=0.059in, ae=3.543in
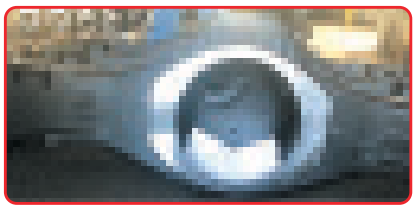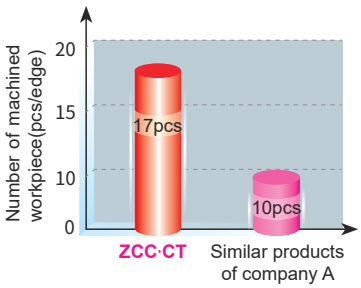
Cooling: External coolant